Park Township

Fire Department

12 S. 160th Avenue/Holland, Michigan 49424 Phone (616) 399-7388 FAX: (616) 399-0975

November 30, 2011

RE: JUSTIFICATION FOR PURCHASE OF A 2012 GMC BRUSH TRUCK

History of 1581 - Brush Truck, Station #2

Our existing brush truck, 1581, is a 1974 GMC K-25, three quarter ton, 4-wheel drive truck which we purchased new. It has a Chevrolet 350 cubic inch V-8 engine and an automatic transmission with full time four wheel drive. The odometer reading as of November, 2011, is 10,079 miles.

It is an 8' step side pickup with the original wooden floor boards in the bed! It is equipped with a front mounted Warn Winch, although its line pull capacity is unknown due to the age of the apparatus and the specifications being unavailable. It is equipped with a 250 gallon steel tank with a Wisconsin Powered Pump and two hose reels.

This unit also carries several "Indian packs" which are portable water tanks with pumps used for extinguishing hot spots in a wildfire. There are also two "Pro-Pak" portable foam units, several shovels and axes carried on this unit. This truck is used to pull the John Boat (1582) for water rescues in Lake Macatawa and Lake Michigan.

Justification:

1. This vehicle is 38 years old. The
   - -repair parts for the pump are not available, or hard to find, as the pump is obsolete
   - -water tank is made out of steel and is in very poor condition as it has rusted over the years
   - -brakes are undersized for the additional weight this truck carries. There are repeated complaints by drivers that this unit is difficult to stop.

2. This truck is unreliable. It had to be towed from a scene
   - -twice in 2010
   - -once in 2011

3. Preventative maintenance and repair costs:

Fiscal Year 2007/2008	$145
Fiscal Year 2008/2009	$400
Fiscal Year 2009/2010	$624
Fiscal Year 2010/2011	$454
Fiscal Year 2011/2012	$348

4. This apparatus will be a multi-use vehicle:
   - -fire suppression for wildland fires
   - -tow vehicle for our rescue boat
   - -tow vehicle for the Fire Prevention Trailer
   - -snowplow for the Fire Department parking lots
   - -traffic control unit at major incidents
   - -used to access homes and areas along Lake Michigan that are difficult to get to with our larger fire apparatus

Proposed Replacement:

2012 GMC K-3500 Pickup Truck	$23,749
Skid Unit	$15,500
One XTL 1500 VHF Radio (Communications with 911 And other units)	$ 1,325
Light Bar Package	$ 3,000
Striping and Decals	$ 3,000
Brush and window guards	$ 1,975
Boss 8"2" V-Blade Plow ****	$ 5,100
2.5% for loose equipment and overages	$ 1,351
Total Not To Exceed	**$55,000**

**** This vehicle will be used for snowplowing the Fire Department parking lots. An onsite vehicle will eliminate outsourcing this job resulting in a cost savings of $4,000 per year for Station #2.

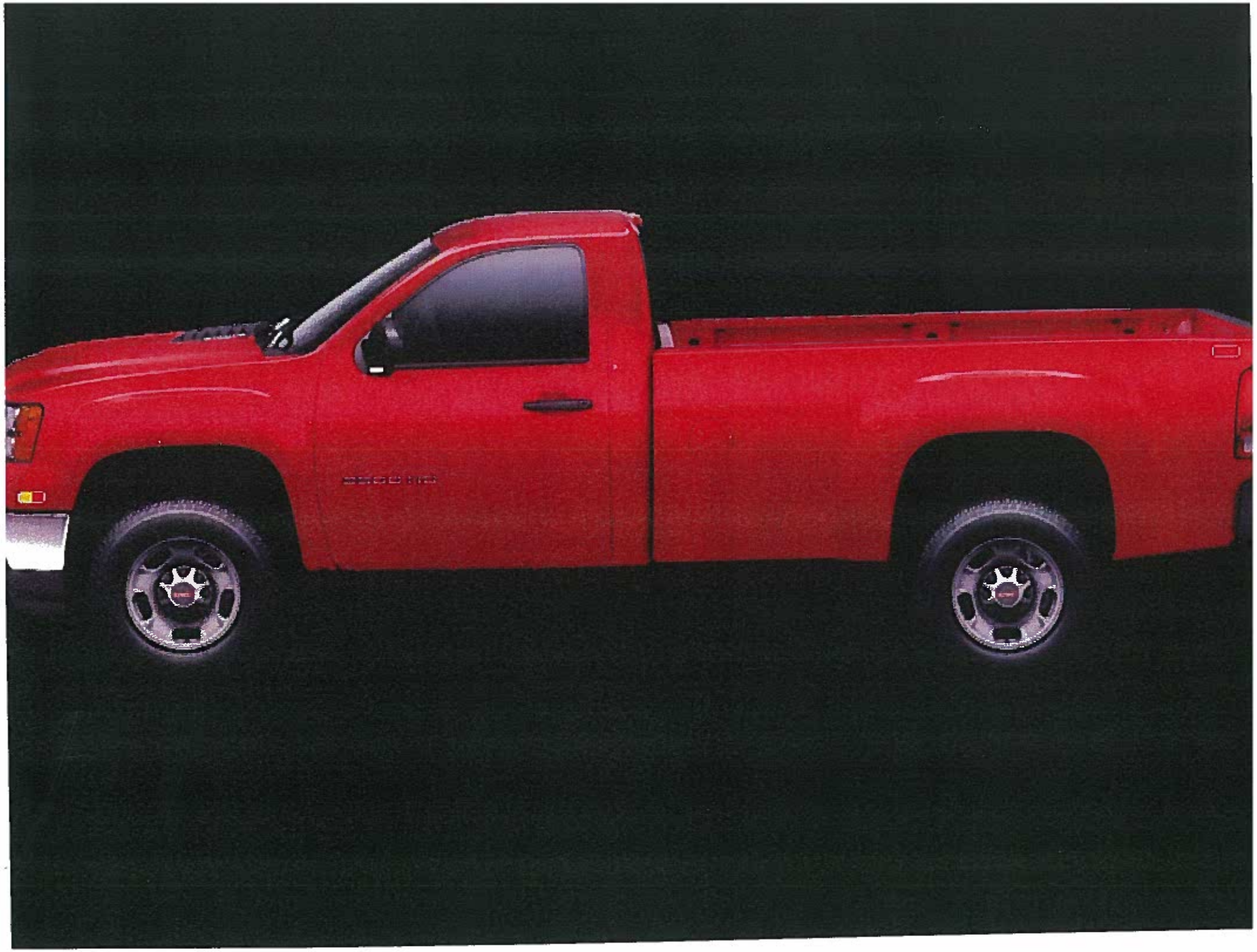

2012 4x4 pickup comparison 1-ton std.cab long box

Make	**Chevrolet**	**GMC**	**Ford**
Model	**K-3500**	**K-3500**	**F-350**
Dealer	Suski	Elhart	Gorno
Engine	6.0l v-8 366 C.I.	6.0l v-8 366 C.I.	6.2l v-8
flex fuel capable	yes	yes	yes
horsepower/torque	322/380	322/380	385/405
Transmission	6 speed auto	6 speed auto	6 speed auto
transfer case	2 speed active	2 speed active	2 speed active
Alternator	160 amp	160 amp	157 amp
battery	600 cca	600 cca	not stated
aux. battery	630 cca	630 cca	n/a
fuel capacity(gallons)	36	36	35
axle ratio	4.10:1	4.10:1	4.30:1
tire size	LT265/70R18	LT265/70R18	LT245/70R17
tire type	all terrain	all terrain	all terrain
wheels	steel	steel	steel
GVW	10,700	10,700	10,400
trailering pkg.	yes	yes	yes
trailer brake control	yes	yes	no
skid plates	yes	yes	yes
engine oil cooler	yes	yes	not stated
trans. Oil cooler	yes	yes	not stated
front seats	vinyl 40/20/40	vinyl 40/20/40(heated?)	vinyl 40/20/40
power seats	no	no	no
snow plow prep	yes	yes	yes
upfitter switches	1	1	4
hi-idle switch	yes	yes	n/a
air conditioning	yes	yes	yes
tilt wheel / cruise control	yes/yes	yes/yes	yes/yes
floor material	vinyl	vinyl	vinyl
cab marker lights	yes	yes	yes
grille	chrome	chrome	chrome
price delivered to Park Twp.	$23,737.06	$23,749.00	$23,579.00
options:			
Boss 7'6" straight blade	no quote	$4320.00 (2010 price)	$4,839.00
Boss 8'2" V-blade	no quote	$5050.00 (2010 price	$5,689.00

Prepared By: Jim DeGraaf
administrator

Park Twp

2012 Fleet/Non-Retail GMC Sierra 3500HD 4WD Reg Cab 133.7" Work Truc

WINDOW STICKER

2012 GMC Sierra 3500HD 4WD Reg Cab 133.7" Work Truck	Interior: - No color has been selected.
6.0L/366 CID Gas V8	Exterior 1: - No color has been selected.
* 6-Speed HD Automatic w/OD	Exterior 2: - No color has been selected.

CODE	MODEL	MSRP
TK30903	2012 GMC Sierra 3500HD 4WD Reg Cab 133.7" Work Truck	$33,115.00
	OPTIONS	
SRW	CHASSIS, SINGLE REAR WHEEL	$0.00
E63	PICKUP BOX, WIDESIDE	$0.00
FE9	EMISSIONS, FEDERAL REQUIREMENTS	$0.00
L96	ENGINE, VORTEC 6.0L VARIABLE VALVE TIMING V8 SFI E85-COMPATIBLE, F	$0.00
MYD	TRANSMISSION, 6-SPEED AUTOMATIC, HEAVY-DUTY, ELECTRONICALLY CO	$0.00
GT5	REAR AXLE, 4.10 RATIO	$0.00
1SA	WORK TRUCK PREFERRED EQUIPMENT GROUP	$0.00
JFK	GVWR, 10,700 LBS. (4854 KG) WITH SINGLE REAR WHEELS	$0.00
PYT	WHEELS, 18" (45.7 CM) PAINTED STEEL	$0.00
QGM	TIRES, LT265/70R18E ALL-TERRAIN, BLACKWALL	$150.00
ZY1	PAINT, SOLID	$0.00
74U	FIRE RED	$0.00
AE7	SEATS, FRONT 40/20/40 SPLIT-BENCH, 3-PASSENGER, DRIVER AND FRONT	$0.00
88V	DARK TITANIUM, VINYL SEAT TRIM	$0.00
UM7	AUDIO SYSTEM, AM/FM STEREO	$0.00
VYU	SNOW PLOW PREP PACKAGE	$285.00
TP2	BATTERY, AUXILIARY HEAVY-DUTY 600 COLD-CRANKING AMPS, MAINTENA	$135.00
KW1	ALTERNATOR, 160 AMPS	$0.00
UF3	SWITCH, HIGH IDLE	$200.00
NZZ	SKID PLATE PACKAGE, FRAME-MOUNTED SHIELDS	INC

Report content is based on current data version referenced. Any performance-related calculations are offered solely as guidelines. Actual unit performance will depend on your operating conditions.

GM AutoBook, Data Version: 191.0, Data updated 9/20/2011 7:21:00 PM
©Copyright 1986-2005 Chrome Systems Corporation. All rights reserved.
Customer File:

Prepared By:
administrator

2012 Fleet/Non-Retail GMC Sierra 3500HD 4WD Reg Cab 133.7" Work Truc

WINDOW STICKER

J95	BRAKES, 4-WHEEL ANTILOCK, 4-WHEEL DISC WITH SINGLE REAR WHEELS	INC
U01	LAMPS, SMOKED AMBER ROOF MARKER	$55.00
TRW	PROVISION FOR CAB ROOF-MOUNTED LAMP/BEACON	INC
VK3	LICENSE PLATE FRONT MOUNTING PACKAGE	$0.00
JL4	STABILITRAK, STABILITY CONTROL SYSTEM WITH PROACTIVE ROLL AVOID	INC
	SUBTOTAL	**$33,940.00**
	Advert/Adjustments	$0.00
	Destination Charge	$995.00
	TOTAL PRICE	**$34,935.00**

Est City: mpg
Est Highway: mpg
Est Highway Cruising Range: mi

Municipal Discount — 11186.00

Complete 23749.00

Power windows & Locks
ADD 810.00

Chromes side steps
ADD 436.00

Report content is based on current data version referenced. Any performance-related calculations are offered solely as guidelines. Actual unit performance will depend on your operating conditions.

GM AutoBook, Data Version: 191.0, Data updated 9/20/2011 7:21:00 PM
©Copyright 1986-2005 Chrome Systems Corporation. All rights reserved.
Customer File:

Prepared By:
administrator

2012 Fleet/Non-Retail GMC Sierra 3500HD 4WD Reg Cab 133.7" Work Truc

STANDARD EQUIPMENT

STANDARD EQUIPMENT - 2012 Fleet/Non-Retail TK30903 4WD Reg Cab 133.7" Work Truck

ENTERTAINMENT

- Audio system, AM/FM stereo with seek-and-scan and digital clock (Not available with (U2K) SiriusXM Satellite Radio)
- SiriusXM Satellite Radio, delete
- Audio system feature, 4-speaker system (Requires Regular Cab models)

EXTERIOR

- Wheels, 17" (43.2 cm) painted steel includes painted center caps and a steel spare (spare wheel will not cosmetically match the other 6 wheels) Spare not included with (ZW9) pickup box delete unless a spare tire is ordered (Requires (9F6) 12,800 lbs. GVWR or (C7J) 13,000 lbs. GVWR (dual rear wheel).)
- Tires, LT235/80R17E all-season highway, blackwall (Requires (9F6) 12,800 lbs. GVWR or (C7J) 13,000 lbs. GVWR (dual rear wheel). Includes 7 tires with (E63) Fleetside pickup box. Includes 6 tires with (ZW9) pickup box delete.)
- Tire carrier, outside spare, winch-type mounted under frame at rear (Orders with (ZW9) Pickup box delete will not include a Spare Tire Carrier unless a spare tire is ordered.)
- Spare tire lock keyed cylinder lock that utilizes same key as ignition and door (Not included when (ZW9) pickup box delete or (VF7) rear bumper delete is ordered.)
- Bumper, front chrome includes body-color bumper top caps
- Bumper, rear chrome, step-style with pad (Not available with (ZW9) pickup box delete)
- Grille, chrome surround
- Headlamps, dual halogen composite with automatic exterior lamp control and flash-to-pass feature
- Lamps, dual cargo area lamps
- Mirrors, outside high-visibility vertical camper-style, Black with manual folding and extension and lower convex spotter glass
- Glass, Solar-Ray light-tinted, all windows
- Wipers, front intermittent wet-arm with pulse washers
- Tailgate protection top of tailgate protection cap

Report content is based on current data version referenced. Any performance-related calculations are offered solely as guidelines. Actual unit performance will depend on your operating conditions.

GM AutoBook, Data Version: 191.0, Data updated 9/20/2011 7:21:00 PM
©Copyright 1986-2005 Chrome Systems Corporation. All rights reserved.
Customer File:

2012 Fleet/Non-Retail GMC Sierra 3500HD 4WD Reg Cab 133.7" Work Truc

STANDARD EQUIPMENT

STANDARD EQUIPMENT - 2012 Fleet/Non-Retail TK30903 4WD Reg Cab 133.7" Work Truck

INTERIOR

- Seats, front 40/20/40 split-bench, 3-passenger, driver and front passenger manual reclining with outboard head restraints and center fold-down armrest with storage
- Seat trim, Vinyl
- LPO, Heated seats kit, driver and front passenger (Not available with (ZW9) pickup box delete.)
- Floor covering, Black rubberized vinyl
- Steering wheel includes theft-deterrent locking feature
- Steering column, Tilt-Wheel, adjustable with brake/transmission shift interlock
- Instrumentation, analog with speedometer, fuel level, engine temperature, tachometer, voltmeter and oil pressure indicators
- Driver Information Center with odometer, trip odometer and message center (monitors numerous systems depending on vehicle equipment level including low fuel, turn signal "on", transmission temperature and oil change notification) (Driver Information Center controls are operated through the trip button unless (UK3) steering wheel mounted audio controls is ordered. On 3SA and 4SA, includes 8-point compass and outside temperature.)
- Warning tones headlamp on, key-in-ignition, driver and passenger buckle up reminder and turn signal on
- Cruise control, electronic with set and resume speed, located on steering wheel
- Air conditioning, single-zone manual front climate control
- Cup holders, front (Also includes rear cupholders on Extended and Crew Cab models)
- Power outlets 2 auxiliary instrument panel-mounted with covers, 12-volt
- Mirror, inside rearview manual day/night
- Headliner, Opal Gray-colored cloth with matching retainer moldings
- Visors, driver and front passenger, sliding with clip and passenger side vanity mirror with cover, Opal Gray-colored
- Assist handle, front passenger (Also includes rear assist handles in the headliner on Extended and Crew Cab models)
- Lighting, interior with dome and reading lights, illuminated entry feature and backlit instrument panel switches
- Coat hooks, rear driver and passenger side

Report content is based on current data version referenced. Any performance-related calculations are offered solely as guidelines. Actual unit performance will depend on your operating conditions.

GM AutoBook, Data Version: 191.0, Data updated 9/20/2011 7:21:00 PM
©Copyright 1986-2005 Chrome Systems Corporation. All rights reserved.

2012 Fleet/Non-Retail GMC Sierra 3500HD 4WD Reg Cab 133.7" Work Truc

STANDARD EQUIPMENT

STANDARD EQUIPMENT - 2012 Fleet/Non-Retail TK30903 4WD Reg Cab 133.7" Work Truck

MECHANICAL

- Engine, Vortec 6.0L Variable Valve Timing V8 SFI E85-compatible, FlexFuel capable of running on unleaded or up to 85% ethanol (322 hp [240.1 kW] @ 4400 rpm, 380 lb-ft of torque [513.0 N-m] @ 4200 rpm) (Does not include E85 capability with (ZW9) pickup box delete.)
- Transmission, 6-speed automatic, heavy-duty, electronically controlled with overdrive and tow/haul mode (Requires (L96) Vortec 6.0L V8 SFI engine.)
- Rear axle, 3.73 ratio (Not available with (L96) Vortec 6.0L V8 SFI engine on TC30903 with Single Rear Wheels.)
- Suspension Package, Handling/Trailering, heavy-duty includes 35mm monotube shocks and 34mm front stabilizer bar
- Pickup box, Wideside
- GVWR, 12,800 lbs. (5806 kg) with dual rear wheels (Requires TK30903 with (L96) Vortec 6.0L V8 SFI engine.)
- Air cleaner, high-capacity
- Transfer case, with floor-mounted shifter (Requires 4WD models)
- Differential, heavy-duty automatic locking rear
- Four wheel drive
- Trailering equipment, heavy-duty includes trailering hitch platform and 2.5- inch receiver with 2" adapter, 7-wire harness (harness includes wires for: park lamps, backup lamps, right turn, left turn, electric brake lead, battery and ground) with independent fused trailering circuits mated to a 7-way sealed connector, wiring harness for after-market trailer brake controller (located in the instrument panel harness) and (JL1) integrated trailer brake controller (Will be deleted if (ZW9) pickup box delete or (VF7) rear bumper delete is ordered.)
- Cooling, auxiliary external transmission oil cooler heavy-duty air-to-oil
- Cooling, external engine oil cooler heavy-duty air-to-oil, integral to driver side of radiator tank
- Battery, heavy-duty 600 cold-cranking amps, maintenance-free with rundown protection and retained accessory power
- Alternator, 125 amps
- Trailer brake controller, integrated
- Recovery hooks, front, frame-mounted
- Frame, fully-boxed, hydroformed front section

Report content is based on current data version referenced. Any performance-related calculations are offered solely as guidelines. Actual unit performance will depend on your operating conditions.

©Copyright 1986-2005 Chrome Systems Corporation. All rights reserved.

2012 Fleet/Non-Retail GMC Sierra 3500HD 4WD Reg Cab 133.7" Work Truc

STANDARD EQUIPMENT

STANDARD EQUIPMENT - 2012 Fleet/Non-Retail TK30903 4WD Reg Cab 133.7" Work Truck

- Suspension, front independent, torsion bar
- Suspension, rear 4+1+2 multi-leaf springs for single rear wheel and 3+1+2 multi-leaf springs for dual rear wheel
- Steering, power, recirculating ball
- Brakes, 4-wheel antilock, 4-wheel disc with dual rear wheels
- Exhaust, aluminized stainless-steel muffler and tailpipe

SAFETY

- Daytime Running Lamps with automatic exterior lamp control
- Air bags, frontal, driver and right-front passenger (Always use safety belts and the correct child restraints for your child's age and size, even in vehicles equipped with air bags. Children are safer when properly secured in a rear seat. See the Owner's Manual and child safety seat instructions for more safety information.)
- OnStar, delete

Report content is based on current data version referenced. Any performance-related calculations are offered solely as guidelines. Actual unit performance will depend on your operating conditions.

GM AutoBook, Data Version: 191.0, Data updated 9/20/2011 7:21:00 PM
©Copyright 1986-2005 Chrome Systems Corporation. All rights reserved.

SKID UNIT - FOREST PAC

A tank, a live hose reel and/or crosslay, a portable fire pump and/or a compressed air foam system (CAFS), with an engine: these can be combined into a single one-piece assembly that can be slipped onto a truck bed, trailer, or into a body and used for flowing water and or foam on a structural fire, car fire or wildfire.

The most common wildland and urban interface fire engines in North America combine a small truck with a water tank and a high performance portable pump. Municipal/industrial fire departments and all forestry fire authorities use drop-in units. The sizes vary from 50 gallons, for an ATV, up to 500 gallons for full size trucks.

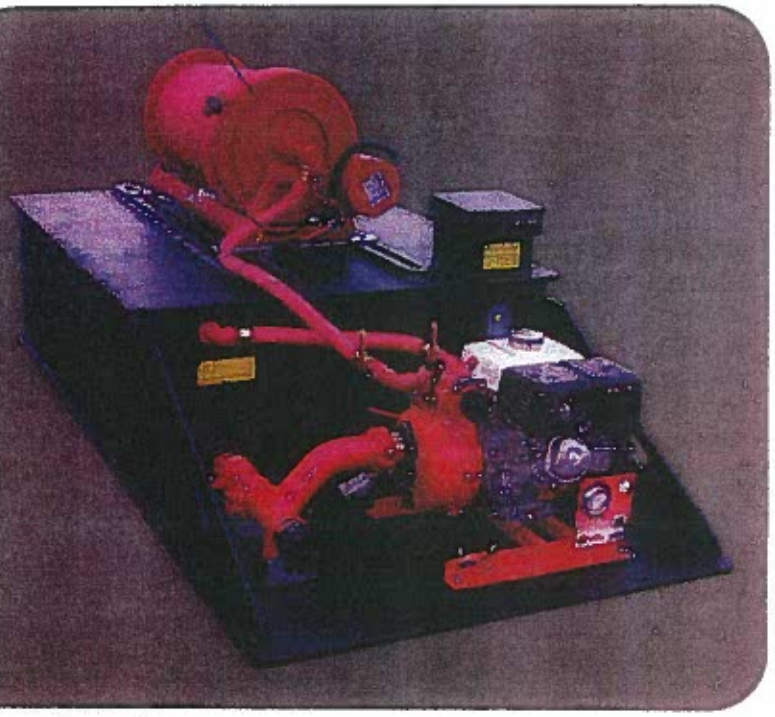

SPECIFICATIONS:

- 200 fully baffled propopylene water tank
- 6.5hp twin impeller fire pump
- 70gpm at 10psi, 40gpm at 100psi and 20gpm at 125psi
- 1.5 gallons integrated fuel tank
- Lighted control panel
- Low profile electric rewind hose reel
- 1 inch x 100 foot booster hose
- 2.5 inch tank to pump 1/4 turn ball valve
- Multiple outlets manifold
- 1.5 inch service line with cap and chain

OPTIONS:

- Increase water tank and hose reel sizes
- Pre-connect hose tray with connection
- Set of chrome outriggers with 3 ways rollers
- Scotty around the pump foam system with integrated foam cell
- Storage frame
- And many more

*CET is a trademark of CET Fire Pumps Mfg Ltd

SKID UNIT - FOREST PAC

WATER TANK

The water tank shall be constructed of 1/2" thick polypropylene sheet stock with PolymarCo-PP™ resin. Water tank shall be welded with Heavy Duty extruded joint. The material shall be of a certified, high quality, non-corrosive, stress relieved thermo plastic, black in colour with a textured finish, and UV stabilized for maximum protection. The skid type water tank shall be of a standard configuration and shall be so designed to have complete modular slide in capability. The unit shall incorporate transverse partitions manufactured for 3/8" PT2E polypropylene which shall interlock with a series of longitudinal partitions constructed of 3/8" PT2E polypropylene. All swash partitions shall be so designed to allow for maximum water and air flow between compartments and are fully welded to each other as well as to the inside of the tank. The passenger side rear wall of the tank shall have a standard built in sight gauge 3" in width, and 70% transparent.

FILL TOWER & TANK COVER

The tank shall be equipped with a combination vent/overflow and manual fill tower. The fill tower shall have a 8" x 8" x 8" square hinged type cover. The tower shall be located in the right rear corner of the tank. There shall be a vent / overflow installed inside and to the extreme rear of the tower approximately 2" down from the top. This vent / overflow shall be of a standard schedule 40 polypropylene pipe with minimum ID of 3". The vent / overflow shall be piped internally toward the front and exit out the front tank wall with a 1/2" extension past the front tank wall. The tank cover shall be constructed of 1/2" thick PT2E polypropylene, black in color, UV stabilized.

TANK CAPACITY

The tank shall have a capacity of 200 U.S. gallons of water.

SUMP

The floor of the tank shall be manufactured from 3/4" PT2E polypropylene. There shall be one (1) sump as standard per tank. The sump shall be integral to the tank floor and be a minimum of 3/8" deep recessed into the floor. The sump shall not be visible from or protrude through the bottom of the tank.

TANK OUTLETS

There shall be two standard tank outlets located in the same vertical plane on the driver side rear wall of the tank. One (1) 2-1/2" female NPT tank to pump suction fitting and one (1) 1-1/2" female NPT tank fill fitting with flow deflector.

1" TANK DRAIN

There shall be a 1" tank drain to the rear side of the tank with a brass plug.

TANK MOUNTING BLOCKS

The cover shall incorporate two (2) booster reel mounting blocks that shall accommodate two (2) each sliding nut fasteners. These 4" large mounting blocks shall be welded to the covers running from the rear edge of the tank forward to the front edge.

*CET is a trademark of CET Fire Pumps Mfg Ltd

SKID UNIT - FOREST PAC

SKID BASE

There shall be a full width skid base manufactured of 3/4" PT2E polypropylene welded to the tank. This base shall be 48" wide by 96" long and shall extend 34" past the tank in the rear to allow for pump mounting. The pump mounting area shall be supported by ½" PT2E polypropylene gussets approximately 15" high by 32" long. The gussets shall be equipped with 2" holes to assist in lifting the unit. The mounts shall allow for the truck to be secured directly to a truck bed without the need for any skid frame work underneath.

Tank will be baffled in accordance with latest NFPA requirements.

PUMP

The pump shall be a CET DI-PFP-6hpHND-EM-Twin two (2) stage centrifugal pump, bolted directly to the engine, with a 1.5" NPT suction inlet, two (2) 1" NPT discharge outlets and one (1) 1.5" NPT discharge outlet.

The pump piping shall be flexible to prevent any breakage caused by vibration.

The pump shall be capable of a maximum discharge volume of 80 GPM. at 10 PSI, and a maximum discharge pressure of 150 PSI while pumping 20 GPM. In the center of the performance curve, the pump shall be capable of pumping 50 GPM at 100 PSI.

PUMP ENGINE

The pump shall be driven by a 4-stroke Honda gasoline powered, 6.5 horsepower single cylinder engine. The engine shall be air cooled, 12 volt electric start with recoil backup. The engine shall be fueled from a 1.5 gallon fuel tank which is to be mounted on the engine. The engine shall be connected with a quick disconnect weather proof style connection.

PUMP CONTROLS

A control panel shall be supplied and installed on the pump. The controls shall consist of a master switch, master discharge pressure gauge and panel light for night operations.

SELF PRIMING SYSTEM

The pump engine shall be equipped with a self priming system capable of 10' - 15' lift for fast positive priming.

SUCTION PIPING

All piping on the suction side shall be made of steel (welded joints) schedule 40. The suction piping, the pump and the discharge shall be tested to 400 PSI.

The suction piping shall consist of a 2.5" tank to pump line with a 2.5" flexible rubber hump hose to minimize flex and vibration between the pump and the tank.

Between the tank and the pump there shall be a 2.5" industrial valve. This valve shall remain open to pump from the tank. This pipe shall have a tee into the suction side of the pump, and shall continue to the rear of the truck for overboard suction.

The overboard suction connection shall have a 2.5" NST male adapter and a 2.5" NSTF cap with retaining cable.

*CET is a trademark of CET Fire Pumps Mfg Ltd.

OTHER VALVES

Other openings will be utilized accordingly when pre-connects, booster reels and other accessories that require pressurized water are specified.

DISCHARGE VALVES

All valves larger than 1" shall be a fire service type drop out style ball valve which shall have a hard-coated anodized, high-strength, light-weight aluminum alloy body with rugged stainless steel ball and two PTFE seats.

The valves shall be capable of bi-directional flow with a minimum working pressure rating of 250 psig.

All stainless steel parts shall be made from 300 series material. The valves shall NOT require lubrication of the seats or any other internal waterway component and shall be capable of swinging out of the attached waterway plumbing for easy maintenance, with the removal of six (6) to eight (8) bolts.

Any required valve 1" or smaller, unless otherwise specified, shall be a standard plumbing style industrial ball valve.

DISCHARGES TO REAR OF UNIT

A 1 1/2" fire grade valve drop out style with handle and 1 1/2" NSTM threads shall be furnished with a cap and chain.

TANK FILL

There shall be one (1) 1" Industrial Ball valve plumbed via high pressure hose from the manifold to the Tank Fill inlet noted on the tank for the purpose of filling the tank and re-circulating water during stagnant pump operations.

12V ELECTRIC REWIND LOW PROFILE BOOSTER REEL

A Low Profile Hannay 12v electric rewind booster reel capable of handling a maximum of 100' of 1" rubber only booster hose shall be supplied and installed on the tank top. The hose reel shall be protected against power shortage.

The reel shall have a push button rewind control and a backup geared crank rewind handle.

The reel shall be equipped with a 1" NPT 90 degree swivel inlet, and a 1" NST outlet riser.

The reels discs and drum shall be manufactured of steel and be red in color.

1" NST RUBBER BOOSTER HOSE

The booster reel shall be equipped with 100' of 1" NST standard rubber booster hose.

*CET is a trademark of CET Fire Pumps Mfg Ltd

SKID UNIT - FOREST PAC

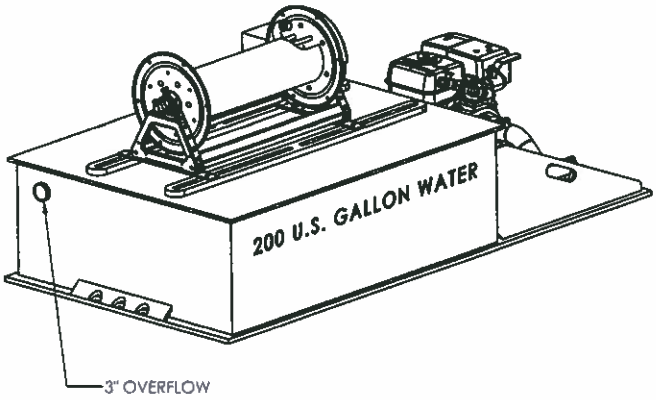

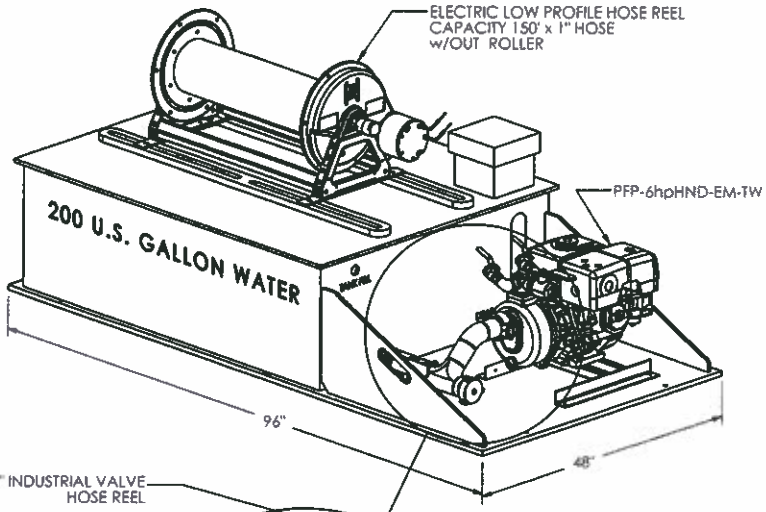

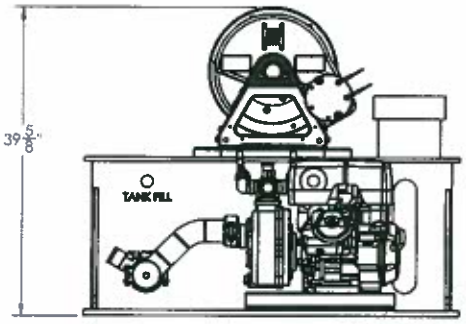

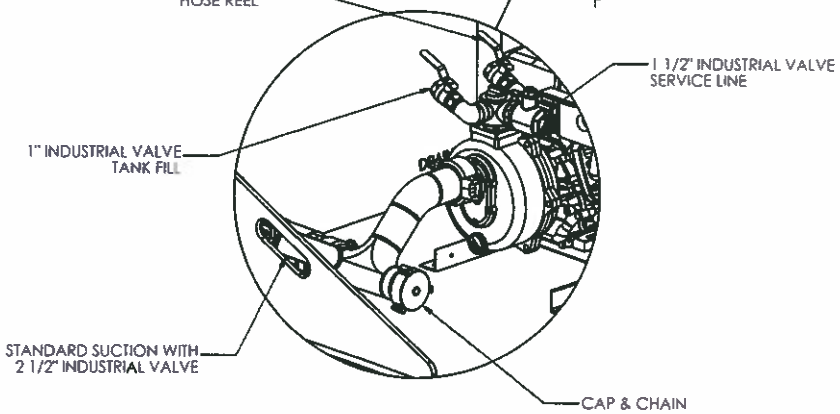

*CET is a trademark of CET Fire Pumps Mfg Ltd.